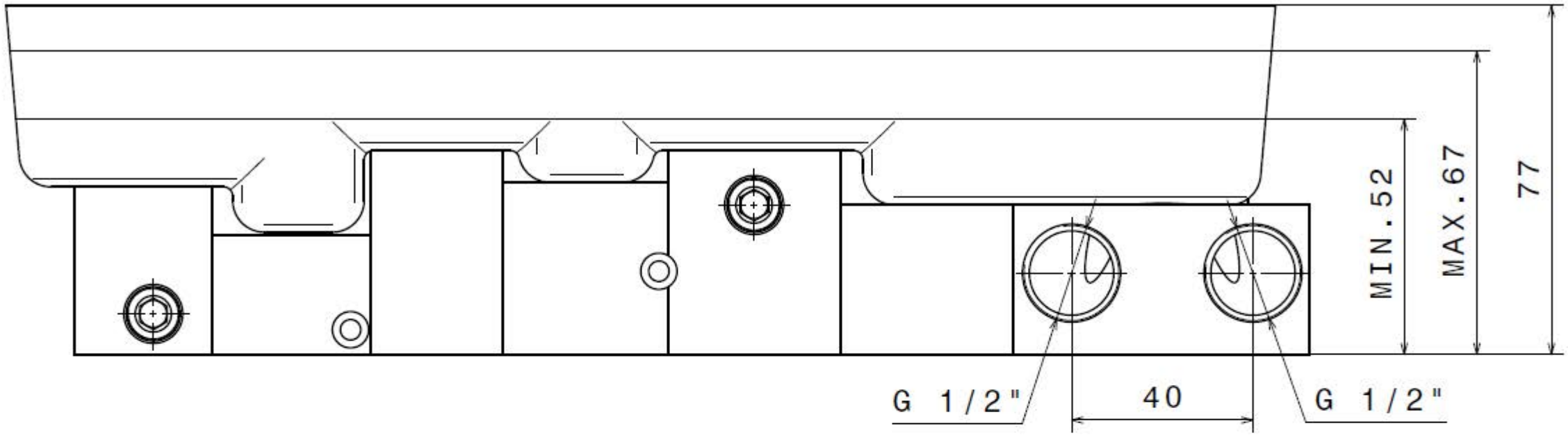
MIN.52
MAX.67
77
G 1/2"
40
G 1/2"

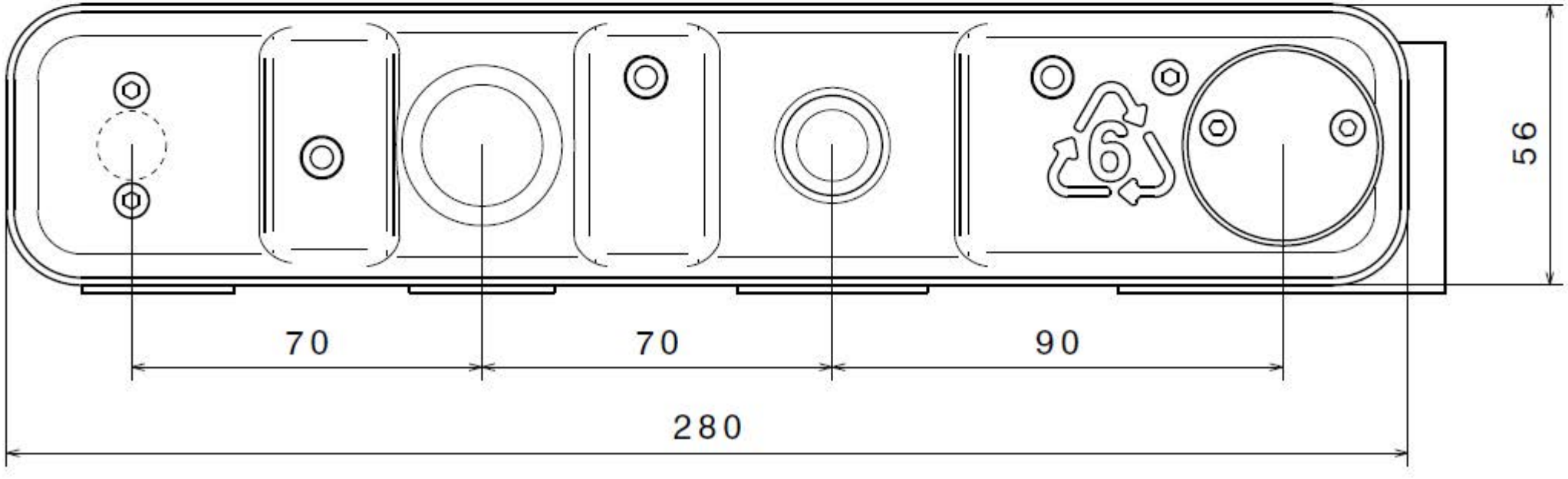
56
70
70
90
280